Anchoring to wall blocking enables EQ spacing of wall standards at any spacing (max 32".)

In absence of wall blocking, standards mount to studs @16" O.C.

Uppermost load bearing bracket must be located at least 6" from the top of the standard.

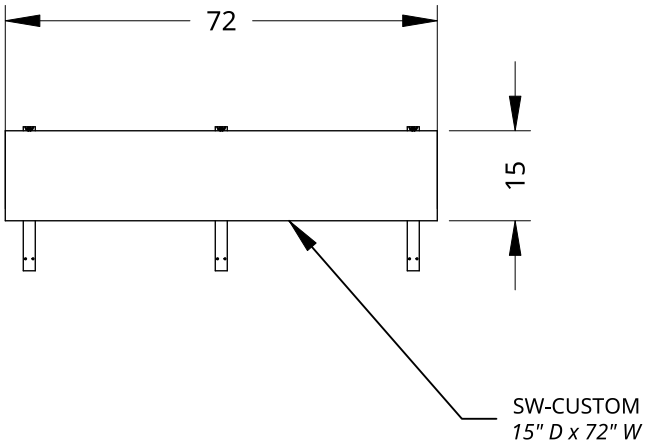

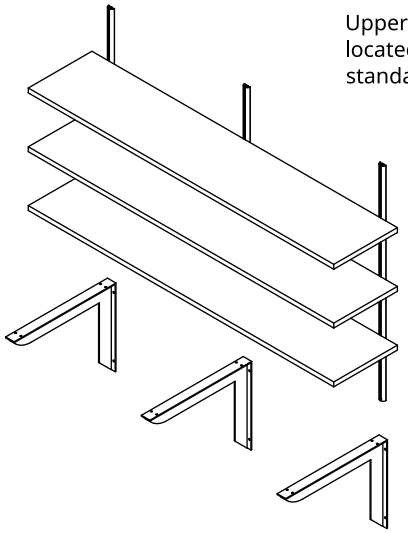

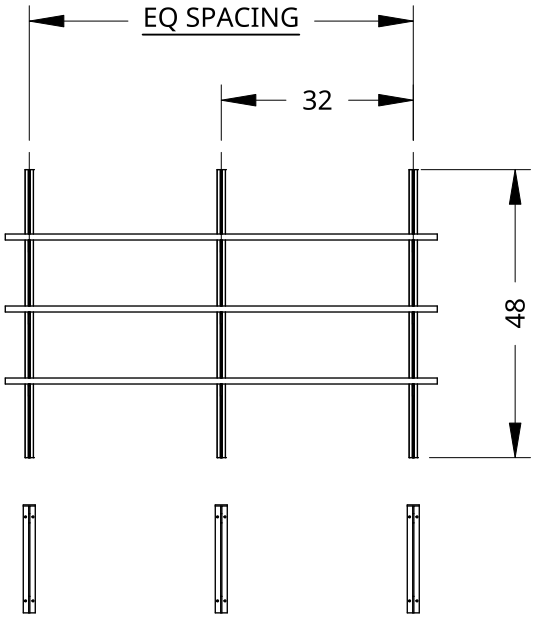

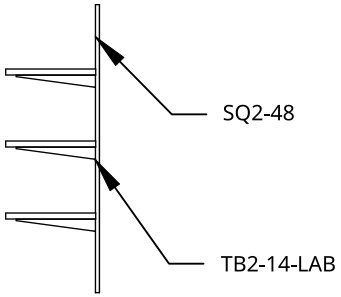

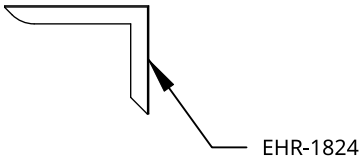

All shelf positions are fully adjustable and VIF.

Rakks®
BETTER DESIGN ENDURES

254 Turnpike Road
Westborough, MA 01581
p: 781-455-8700 f: 781-455-8702
rakks.com

DATE: 02/06/2025	BY:CARTER M	SHEET: 1 / 1	VERSION:3	APPROVAL: x

JOB NAME:

SHAKE SHACK

DATE	NOTES	REV.